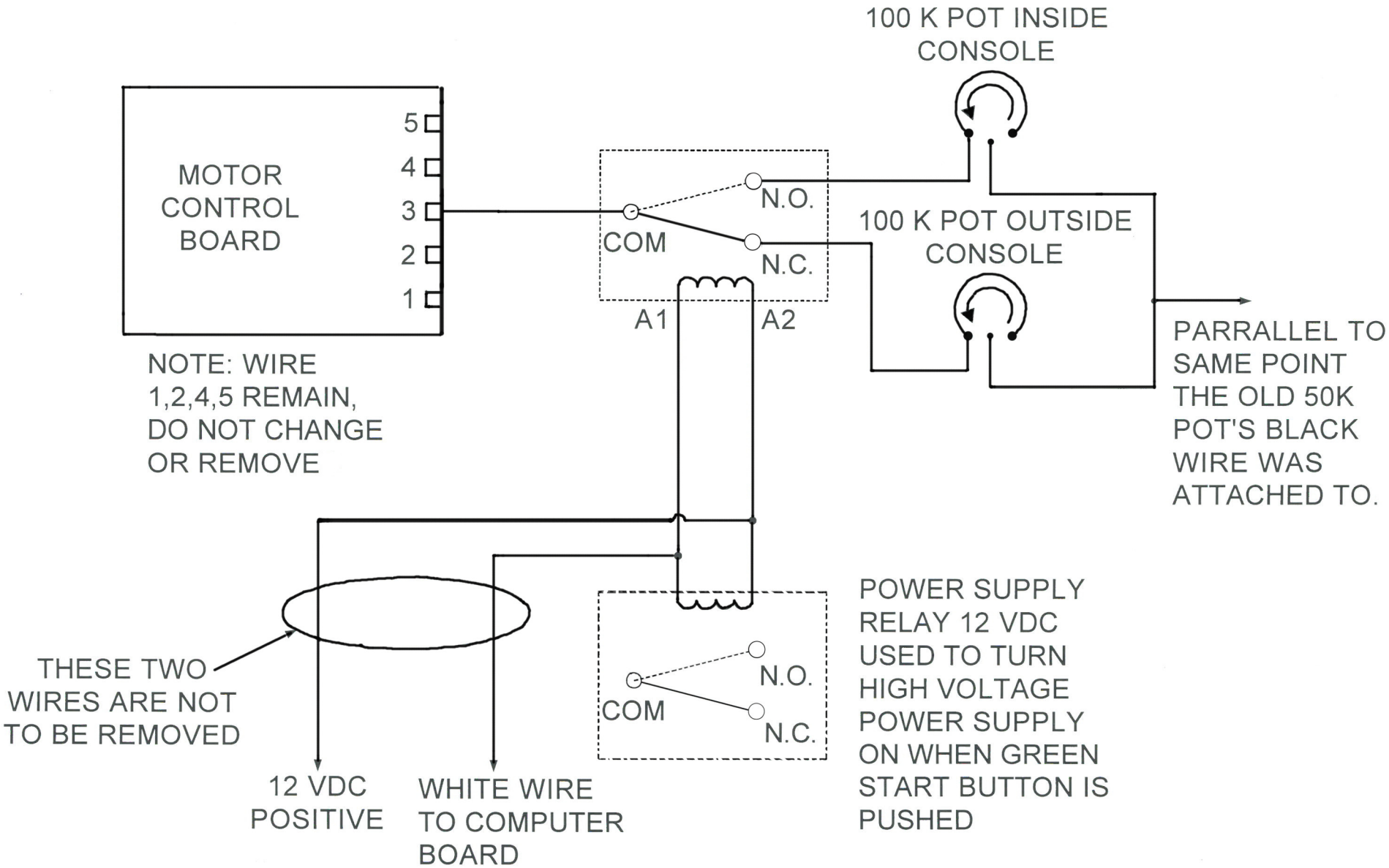

SPEED KIT #2

AUTO CONTROL OF MOTOR ROTATION
PAUL E. HAWKINSON SERIAL #1999 AND BELOW